COASTAL PERFORMANCE™
by Sunrise Windows, LTD.

Coastal Performance Single Hung Window w/ Nailing Fin

"IMPACT"

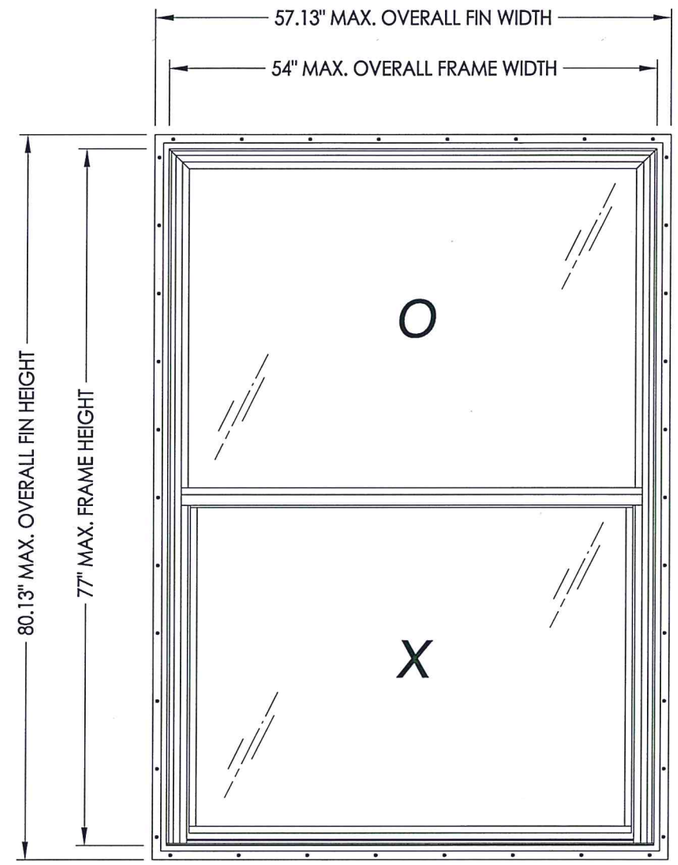

GENERAL NOTES

1. This product has been evaluated and is in compliance with the 7th Edition (2020) Florida Building Code (FBC) structural requirements excluding the "High Velocity Hurricane Zone" (HVHZ).

2. Product anchors shall be as listed and spaced as shown on details. Anchor embedment to base material shall be beyond wall dressing or stucco.

3. When used in areas requiring wind borne debris protection this product complies with FBC Sections 1609.1.2 & R301.2.1.2 and does not require an impact resistant covering. This product meets missile level "D" and includes Wind Zone 3 as defined in ASTM E1996 and FBC Sections 1609.1.2.2 & R301.2.1.2.1.

4. Site conditions that deviate from the details of this drawing require further engineering analysis by a licensed engineer or registered architect.

TABLE OF CONTENTS

SHEET#	DESCRIPTION
1	Typical elevations, design pressures & general notes
2	Vertical & horizontal cross sections
3	Vertical & horizontal cross sections
4	Buck & frame anchoring
5	Components
6	Bill of materials and glazing details

MAX. OVERALL FIN DIMENSION	MAX. OVERALL FRAME DIMENSION	MAX DAY LITE DIMENSION (OPERABLE)	MAX DAY LITE DIMENSION (FIXED)	GLASS TYPE	DESIGN PRESSURE (PSF)	
					POS.	NEG.
57.13" X 80.13"	54.0" X 77.0"	47.5" x 35.25"	49.5" x 35.19"	G1	+50.0	-60.0

L. F. SCHMIDT LICENSE No. 43409 STATE OF FLORIDA PROFESSIONAL ENGINEER

07/23/2020

Documents Prepared By:
Lyndon F. Schmidt
P.E. No. 43409

BUILDING CONSULTANTS, INC.
P.O. Box 230, Valrico, FL 33595
Phone No.: 813.659.9197
FBPE Registry No. 9813

PRODUCT: SINGLE HUNG WINDOW

PART OR ASSEMBLY: TYPICAL ELEVATION, DESIGN PRESSURES & GENERAL NOTES

REVISIONS

NO.	DATE	BY
2	07/23/20	UPDATE TO 7th ED (2020) FBC	DAC
1	5/16/19	REVISE PRODUCT NAME	LFS

DATE: 4/12/18
SCALE: N.T.S.
DWG. BY: JK
CHK. BY: LFS
DRAWING NO.: FL-26906.2
SHEET 1 OF 6

© 2018 R.W. BUILDING CONSULTANTS INC.

\\dc01\rwbc\Clients\Sunrise Windows\A - Florida Product Approvals\FL-26906 - Single Hung Window\C - Drawings\FL 26906 (2020)\FL-26906.1-2.dwg

Note:
1. Lock and keeper located 7" from each end of lock/meeting rail.

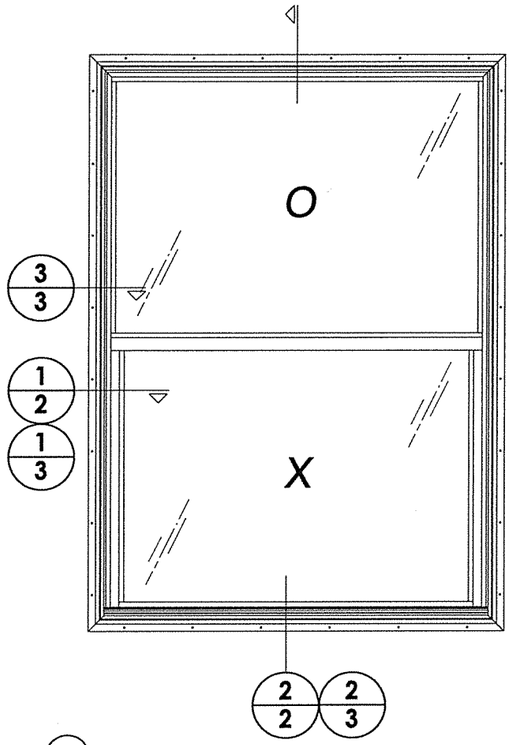

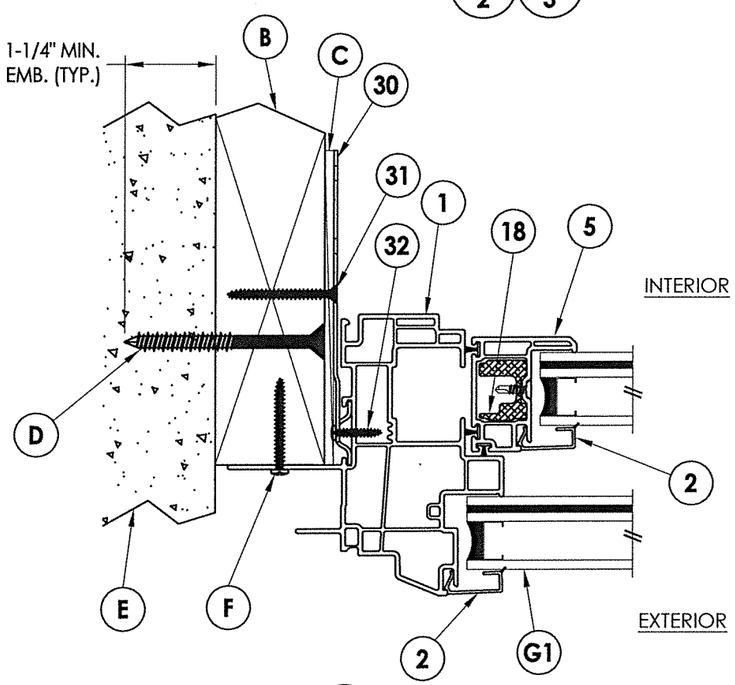

1/2 **HORIZONTAL CROSS SECTION**
2X Buck Masonry Construction

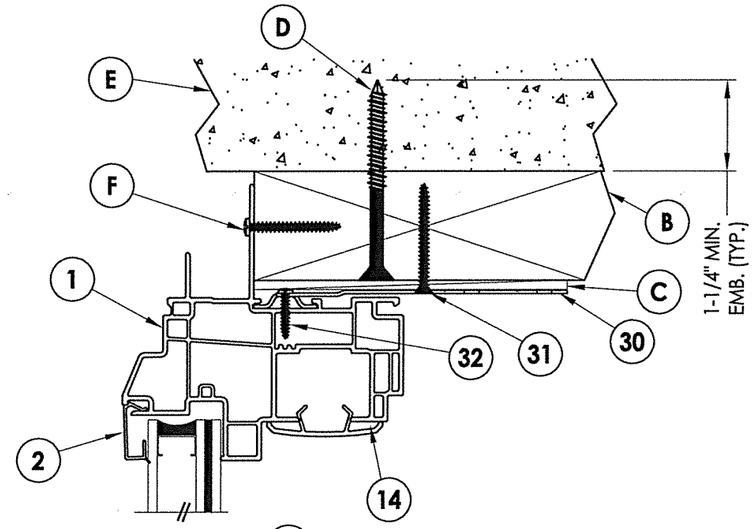

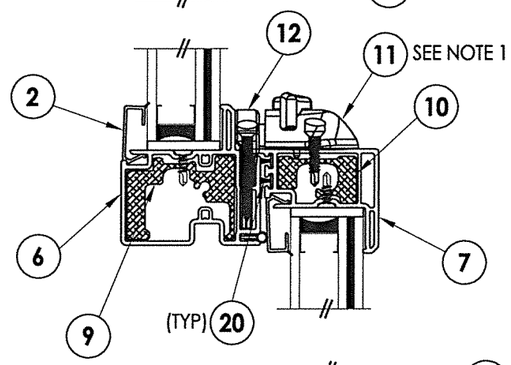

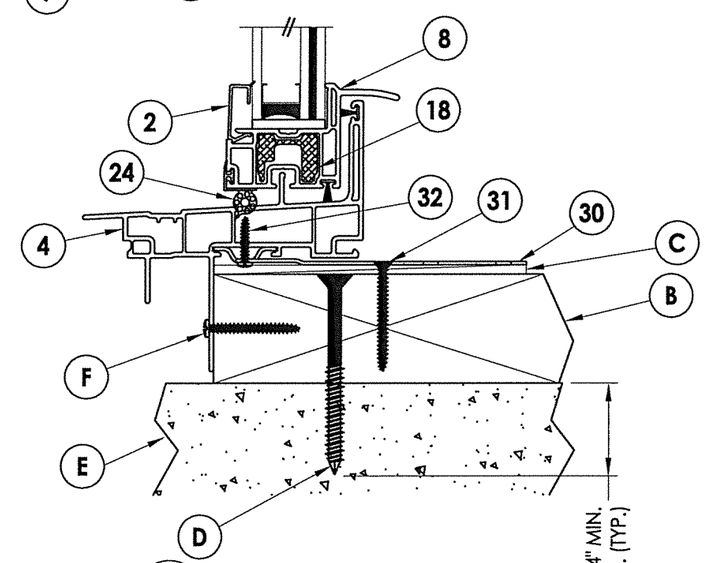

2/2 **VERTICAL CROSS SECTION**
2X Buck Masonry Construction

L. F. SCHMIDT
LICENSE
No. 43409
STATE OF FLORIDA
PROFESSIONAL ENGINEER

07/23/2020

Documents Prepared By:
Lyndon F. Schmidt
P.E. No. 43409

RW BUILDING CONSULTANTS, INC.
P.O. Box 230, Valrico, FL 33595
Phone No.: 813.659.9197
FBPE Registry No. 9813

PRODUCT: SINGLE HUNG WINDOW

PART OR ASSEMBLY: VERTICAL & HORIZONTAL CROSS SECTIONS

REVISIONS

NO.	DATE		BY
2	07/23/20	UPDATE TO 7th ED (2020) FBC	DAC
1	5/16/19	REVISE PRODUCT NAME	LFS

DATE: 4/12/18
SCALE: N.T.S.
DWG. BY: JK
CHK. BY: LFS
DRAWING NO.: FL-26906.2
SHEET 2 OF 6

© 2018 R.W. BUILDING CONSULTANTS INC.

\\dc01\rwbc\Clients\Sunrise Windows\A - Florida Product Approvals\FL-26906 - Single Hung Window\C - Drawings\FL 26906 (2020)\FL-26906.1-2.dwg

Note:
1. Lock and keeper located 7" from each end of lock/meeting rail.

NOTE: Sheet Metal Screws must penetrate a min. of 3 threads through metal.

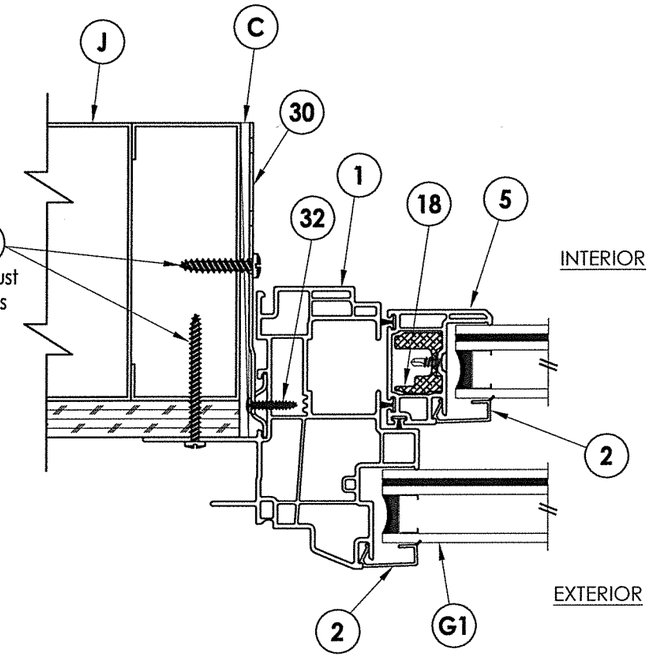

3/3 **HORIZONTAL CROSS SECTION**
Shown w/ Steel Stud Framing Option

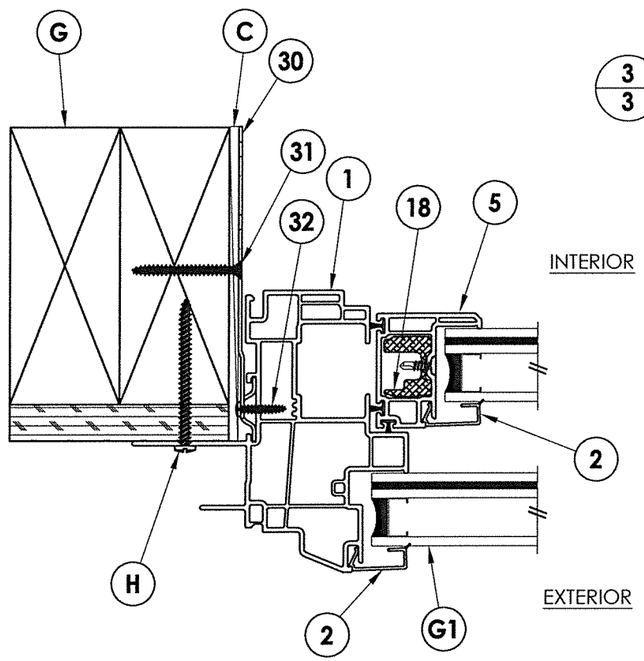

1/3 **HORIZONTAL CROSS SECTION**
Stud Construction

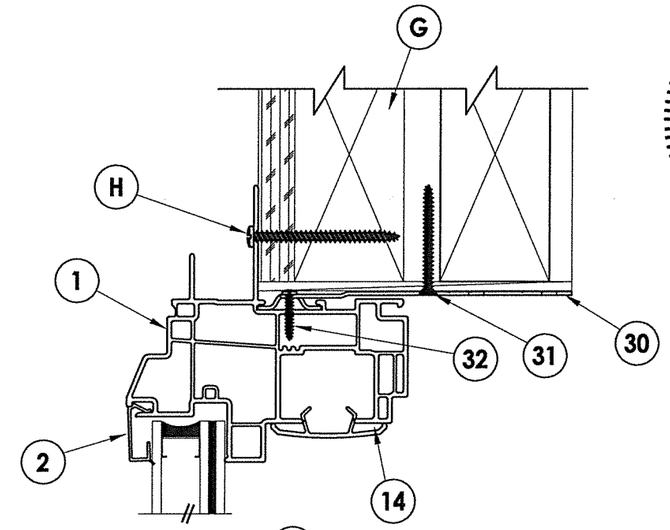

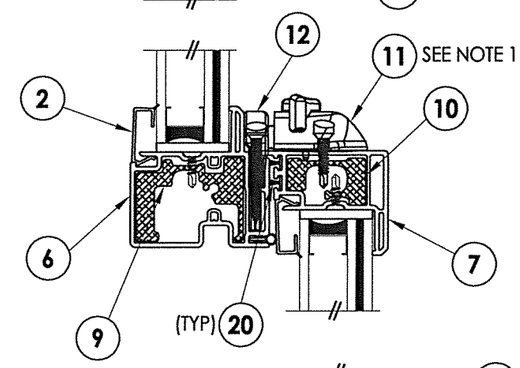

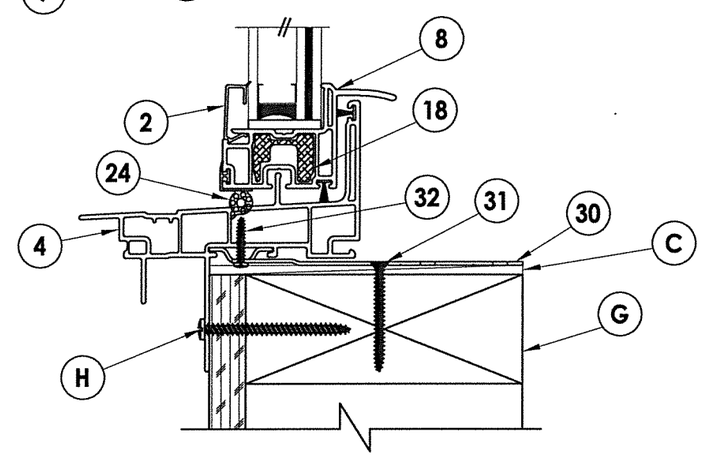

2/3 **VERTICAL CROSS SECTION**
Stud Construction

STATE OF FLORIDA PROFESSIONAL ENGINEER
L. F. SCHMIDT
LICENSE
No. 43409

07/23/2020

Documents Prepared By:
Lyndon F. Schmidt
P.E. No. 43409

BUILDING CONSULTANTS, INC.
P.O. Box 230, Valrico, FL 33595
Phone No.: 813.659.9197
FBPE Registry No. 9813

PRODUCT: SINGLE HUNG WINDOW

PART OR ASSEMBLY: VERTICAL & HORIZONTAL CROSS SECTIONS

NO.	DATE	REVISE PRODUCT NAME	BY
2	07/23/20	UPDATE TO 7th ED (2020) FBC	DAC
1	5/16/19		LFS

REVISIONS

DATE: 4/12/18
SCALE: N.T.S.
DWG. BY: JK
CHK. BY: LFS
DRAWING NO.: FL-26906.2
SHEET 3 OF 6

© 2018 R.W. BUILDING CONSULTANTS INC.

\\dc01\rwbc\Clients\Sunrise Windows\A - Florida Product Approvals\FL-26906 - Single Hung Window\C - Drawings\FL 26906 (2020)\FL-26906.1-2.dwg

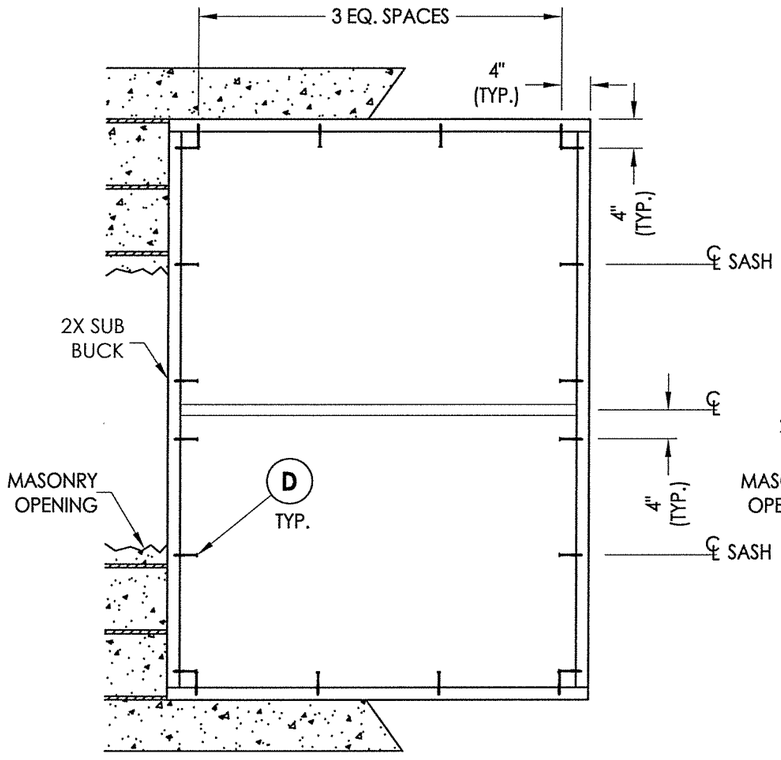

BUCK ANCHORING

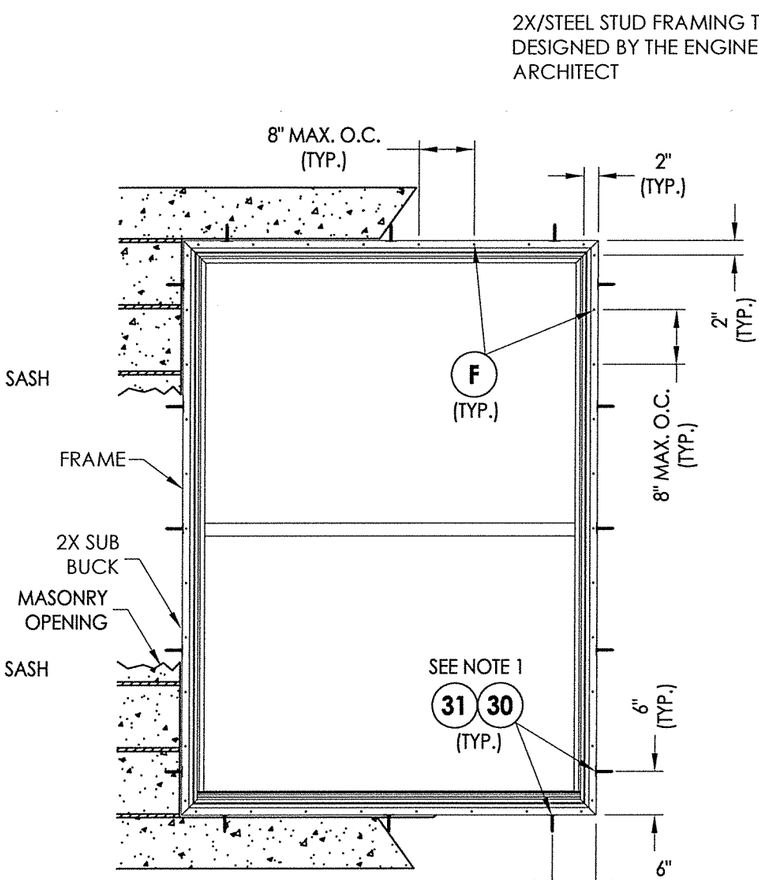

FRAME ANCHORING
2X Buck Masonry Construction

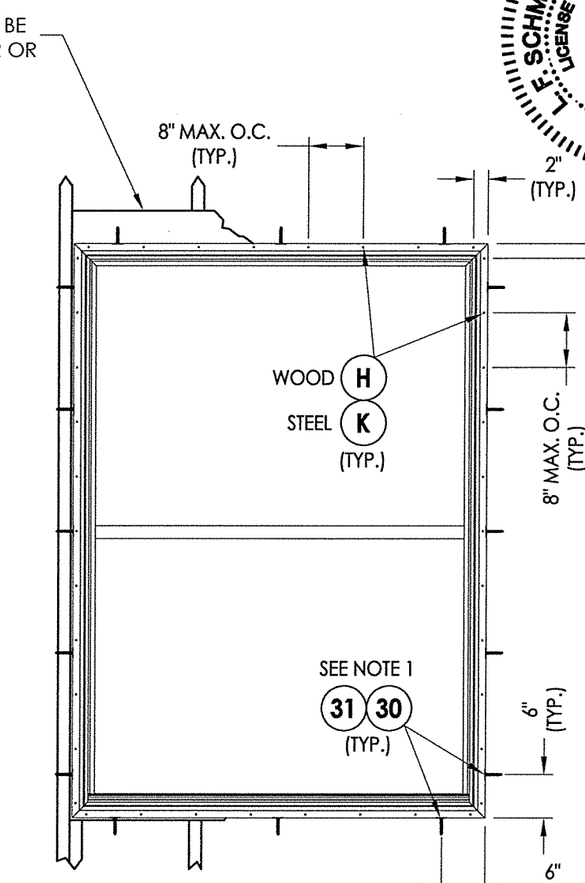

FRAME ANCHORING
Stud Construction

CONCRETE ANCHOR NOTES:

1. Concrete anchor locations at the corners may be adjusted to maintain the min. edge distance to mortar joints.
2. Concrete anchor locations noted as "MAX. ON CENTER" must be adjusted to maintain the min. edge distance to mortar joints, additional concrete anchors may be required to ensure the "MAX. ON CENTER" dimension are not exceeded.
3. Concrete anchor table:

ANCHOR TYPE	ANCHOR SIZE	MIN. EMBEDMENT	MIN. CLEARANCE TO MASONRY EDGE	MIN. CLEARANCE TO ADJACENT ANCHOR
ITW TAPCON®	1/4"	1-1/4"	2"	4"
ELCO ULTRACON®	1/4"	1-1/4"	1"	4"

WOOD SCREW INSTALLATION NOTES:

1. Maintain a minimum 5/8" edge distance, 1" end distance, & 1" o.c. spacing of wood screws to prevent the splitting of wood.

NOTE:

1. INSTALLATION TIE STRAPS REQUIRED AS FOLLOWS (IN ADDITION TO NAIL FIN ANCHORS):
   HEAD & SILL: 6" FROM EACH CORNER & AT CENTERLINE (3 TOTAL).
   JAMBS: 6" FROM EACH CORNER & 3 MORE EQUALLY SPACED (5 TOTAL).

L. F. SCHMIDT LICENSE No. 43409 STATE OF FLORIDA PROFESSIONAL ENGINEER

07/23/2020

Documents Prepared By:
Lyndon F. Schmidt
P.E. No. 43409

RW BUILDING CONSULTANTS, INC.
P.O. Box 230, Valrico, FL 33595
Phone No.: 813.659.9197
FBPE Registry No. 9813

PRODUCT: SINGLE HUNG WINDOW

PART OR ASSEMBLY: BUCK & FRAME ANCHORING

REVISIONS

NO.	DATE	REVISE PRODUCT NAME	BY
2	07/23/20	UPDATE TO 7th ED (2020) FBC	DAC
1	5/16/19		LFS

DATE: 4/12/18
SCALE: N.T.S.
DWG. BY: JK
CHK. BY: LFS
DRAWING NO.: FL-26906.2
SHEET 4 OF 6

© 2018 R.W. BUILDING CONSULTANTS INC.

\\dc01\rwbc\Clients\Sunrise Windows\A - Florida Product Approvals\FL-26906 - Single Hung Window\C - Drawings\FL 26906 (2020)\FL-26906.1-2.dwg

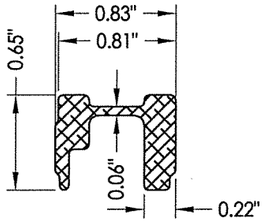

18 STILE/BOTTOM RAIL REINFORCEMENT

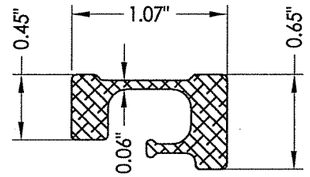

10 LOCK RAIL REINFORCEMENT

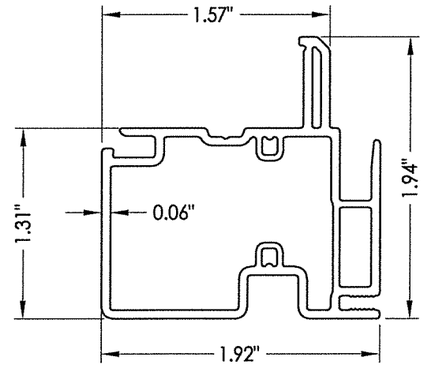

6 MEETING RAIL

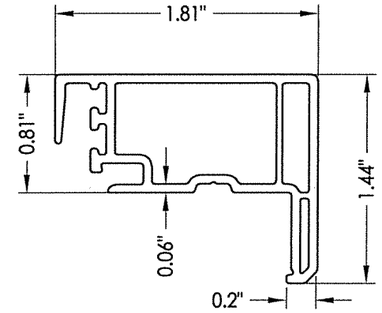

7 LOCK RAIL

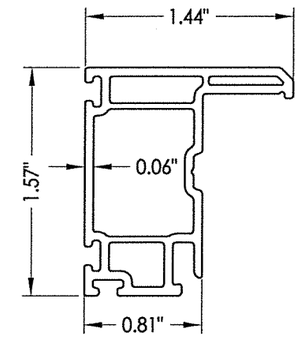

5 STILE

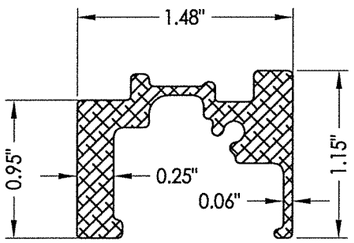

9 MEETING RAIL REINFORCEMENT

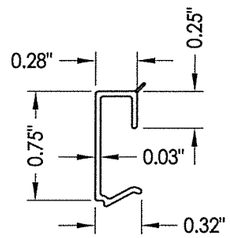

2 GLAZING BEAD

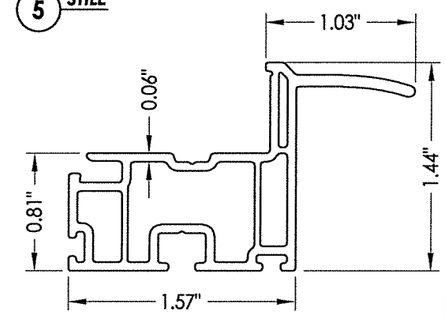

8 BOTTOM RAIL

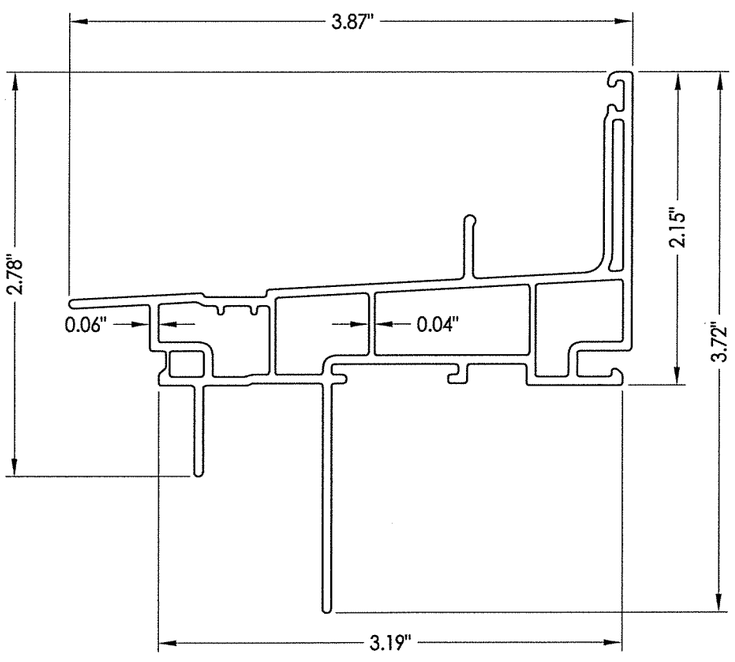

4 SILL

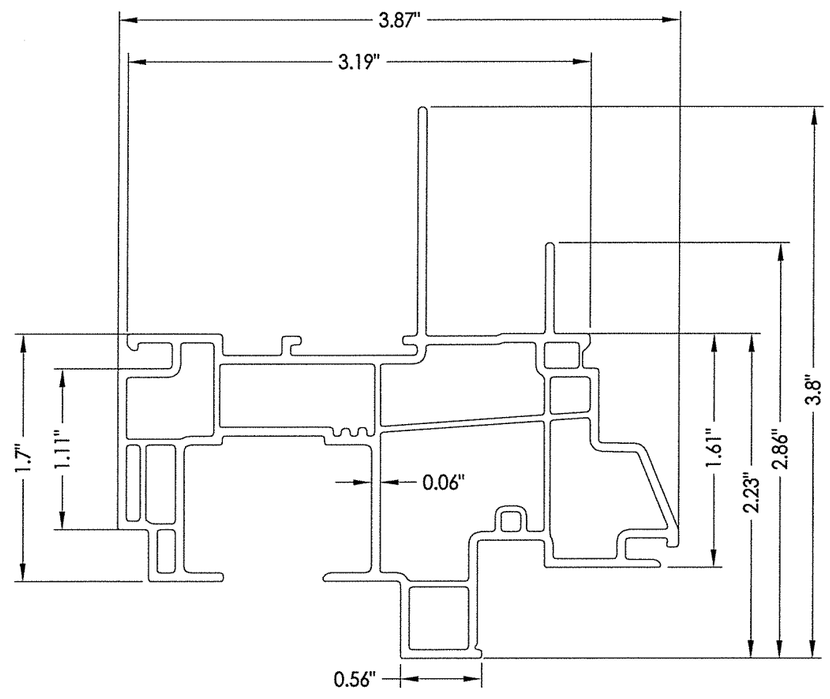

1 FRAME

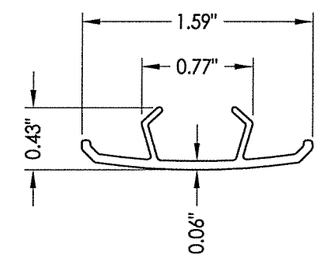

3 HEAD ADAPTER

L. F. SCHMIDT LICENSE No. 43409 STATE OF FLORIDA PROFESSIONAL ENGINEER

07/23/2020

Documents Prepared By:
Lyndon F. Schmidt
P.E. No. 43409

BUILDING CONSULTANTS, INC.
P.O. Box 230, Valrico, FL 33595
Phone No.: 813.659.9197
FBPE Registry No. 9813

PRODUCT: SINGLE HUNG WINDOW

PART OR ASSEMBLY: COMPONENTS

NO.	DATE	REVISE PRODUCT NAME	BY
2	07/23/20	UPDATE TO 7th ED (2020) FBC	DAC
1	5/16/19		LFS

REVISIONS

DATE: 4/12/18
SCALE: N.T.S.
DWG. BY: JK
CHK. BY: LFS
DRAWING NO.: FL-26906.2
SHEET 5 OF 6

© 2018 R.W. BUILDING CONSULTANTS INC.

\\dc01\rwbc\Clients\Sunrise Windows\A - Florida Product Approvals\FL-26906 - Single Hung Window\C - Drawings\FL 26906 (2020)\FL-26906.1-2.dwg

BILL OF MATERIALS

ITEM #	DESCRIPTION	MATERIAL
B	2X BUCK (SG >= 0.42)	WOOD
C	1/8" MAX. SHIM SPACE	-
D	1/4" X 2-3/4" PFH ELCO OR ITW CONCRETE SCREW	STEEL
E	MASONRY - 3,000 PSI MIN. CONCRETE CONFORMING TO ACI 301 OR HOLLOW BLOCK CONFORMING TO ASTM C90	CONCRETE
F	#8 X 1-1/4" PPH SMS (1-3/16" MIN. EMBEDMENT)	STEEL
G	2X STUD (SG >= 0.42)	WOOD
H	#8 X 1-3/4" PPH SMS (1-3/16" MIN. EMBEDMENT)	STEEL
J	STEEL STUD Min. Thk .033" (ASTM A653 GRADE 33 Fy=33 ksi min., Fu=45 ksi min.)	STEEL
K	#10 PPH SELF-DRILLING SMS	STEEL
1	EXTRUDED VINYL FRAME (1853)*	RIGID PVC
2	EXTRUDED VINYL GLAZING BEAD (836B)*	RIGID PVC
3	HEAD ADAPTER (1863)*	RIGID PVC
4	SILL (1852)*	RIGID PVC
5	STILE (1808)*	RIGID PVC
6	MEETING RAIL (1837)*	RIGID PVC
7	LOCK RAIL (1806)*	RIGID PVC
8	BOTTOM RAIL (1805)*	RIGID PVC
9	MEETING RAIL REINFORCEMENT	6063 - T5 ALUM
10	LOCK RAIL REINFORCEMENT	6063 - T5 ALUM
11	SASH LOCK	-
12	KEEPER	-
18	STILE/BOTTOM RAIL REINFORCEMENT	6063 - T5 ALUM
20	WEATHERSTRIP	-
24	BULB GASKET	FOAM
30	INSTALLATION TIE STRAP	STEEL
31	#6 X 1-1/4" FH SMS (1-3/16" MIN. EMBEDMENT)	STEEL
32	#6 X 5/8" PPH SMS	STEEL

* THE APPROVED WHITE RIGID PVC EXTERIOR EXTRUSIONS FOR WINDOWS ARE TO BE PRODUCED BY EXTRUDERS LICENSEES IN "AAMA CERTIFICATION PROGRAMS FOR RIGID PVC EXTRUSIONS".

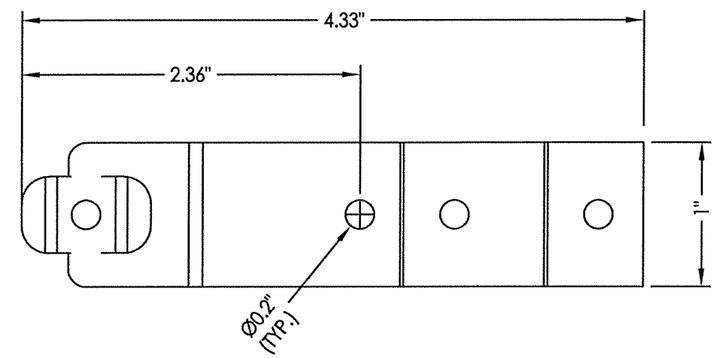

30 INSTALLATION TIE STRAP
18 GA. STEEL (0.048")

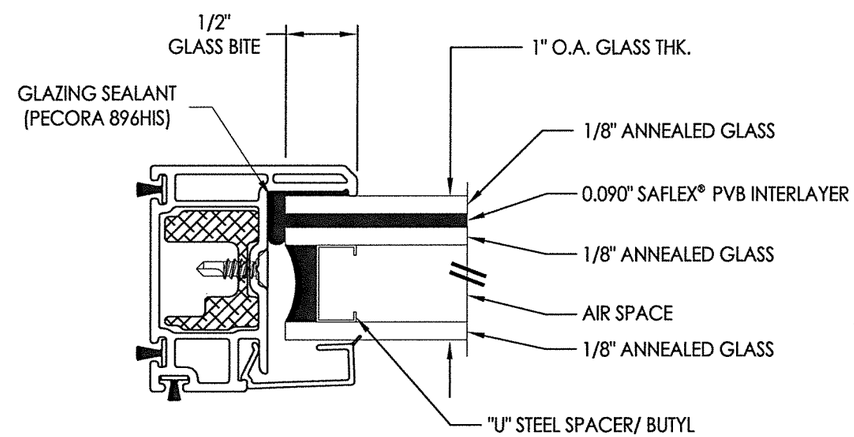

G1 GLAZING DETAIL

L. F. SCHMIDT LICENSE No. 43409 STATE OF FLORIDA PROFESSIONAL ENGINEER

07/23/2020

Documents Prepared By:
Lyndon F. Schmidt
P.E. No. 43409

BUILDING CONSULTANTS, INC.
P.O. Box 230, Valrico, FL 33595
Phone No.: 813.659.9197
FBPE Registry No. 9813

PRODUCT: SINGLE HUNG WINDOW

PART OR ASSEMBLY: BILL OF MATERIALS, COMPONENTS & GLAZING DETAILS

NO.	DATE	BY	REVISIONS
2	07/23/20	DAC	UPDATE TO 7th ED (2020) FBC
1	5/16/19	LFS	REVISE PRODUCT NAME

DATE: 4/12/18
SCALE: N.T.S.
DWG. BY: JK
CHK. BY: LFS
DRAWING NO.: FL-26906.2
SHEET 6 OF 6

© 2018 R.W. BUILDING CONSULTANTS INC.

\\dc01\wbc\Clients\Sunrise Windows\A - Florida Product Approvals\FL-26906 - Single Hung Window\C - Drawings\FL 26906 (2020)\FL-26906.1-2.dwg